Performance Curve

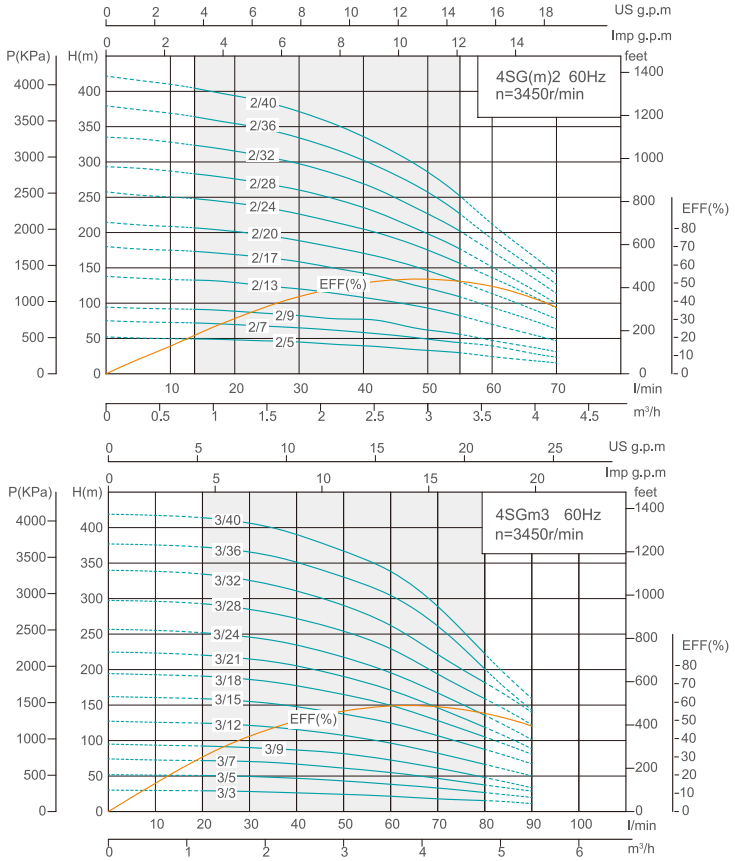

Model		Power		Rate Current (A)				Flow									Head
Single-Phase	Three-Phase	kW	HP	Single		Three		m^3/h	0	0.6	1.2	1.8	2.4	3	3.6	4.2	Range
110V/220V	220V/380V			110V	220V	220V	380V	l/min	0	10	20	30	40	50	60	70	(m)
4SGm2/5	-	0.37	0.5	8.4	4.2				52	50	48	45	40	33	24	15	49~20
4SGm2/7	-	0.55	0.75	11	5.5				75	73	70	65	58	50	39	23	72~31
4SGm2/9	4SG2/9	0.75	1	14.6	7.3	4.2	2.4		94	92	89	82	77	62	47	31	91~40
4SGm2/13	4SG2/16	1.1	1.5	18	9	5.4	3.1		138	134	129	120	108	93	70	47	132~58
4SGm2/17	4SG2/19	1.5	2	-	11.9	8.7	5		180	175	169	159	143	121	94	63	173~79
4SGm2/20	4SG2/22	2.2	3	-	15.6	12.8	7.4		215	209	202	189	171	146	113	78	206~96
4SGm2/24	4SG2/25	2.2	3	-	20.7	14.5	8.3	H(m)	258	250	242	226	205	175	136	93	247~115
-	4SG2/28	3	4			15.9	9.2		293	287	276	260	236	198	150	99	282~126
-	4SG2/32	3	4			17.6	10.1		335	328	316	297	269	225	173	114	322~144
-	4SG2/36	4	5.5			19.9	11.5		380	369	354	334	300	257	191	127	362~159
-	4SG2/40	4	5.5			23.5	13.2		422	410	394	371	336	286	212	141	402~177

Model		Power		Rate Current (A)				Flow											Head
Single-Phase	Three-Phase	kW	HP	Single		Three		m^3/h	0	0.6	1.2	1.8	2.4	3	3.6	4.2	4.8	5.4	Range
110V/220V	220V/380V			110V	220V	220V	380V	l/min	0	10	20	30	40	50	60	70	80	90	(m)
4SGm3/3	-	0.37	0.5	8.4	4.2				31	30	30	28	27	24	22	18	15	12	30~15
4SGm3/5	-	0.55	0.75	11	5.5				51	51	50	49	46	44	39	33	27	19	50~27
4SGm3/7	4SG3/7	0.75	1	14.6	7.3	4.2	2.4		75	72	72	70	67	62	55	46	37	28	72~37
4SGm3/9	4SG3/9	1.1	1.5	18	9	5.4	3.1		95	94	93	90	86	81	72	62	48	33	93~48
4SGm3/12	4SG3/12	1.5	2	-	11.9	8.7	5		127	126	125	121	116	107	96	82	67	50	125~67
4SGm3/15	4SG3/15	2.2	3	-	15.6	12.8	7.4		162	161	159	156	148	138	125	107	87	67	159~87
4SGm3/18	4SG3/18	2.2	3	-	20.7	14.5	8.3	H(m)	194	193	191	186	177	165	149	128	105	81	191~105
-	4SG3/21	3	4			15.9	9.2		225	223	220	215	205	190	171	146	119	88	220~119
-	4SG3/24	3	4			17.6	10.1		257	255	252	246	235	217	196	167	136	101	252~136
-	4SG3/28	4	5.5			19.9	11.5		298	296	293	285	272	254	229	194	159	122	293~159
-	4SG3/32	4	5.5			23.5	13.2		340	339	335	326	311	290	262	221	182	140	335~182
-	4SG3/36	5.5	7.5			27.7	16		377	376	373	366	351	330	305	261	200	143	373~200
-	4SG3/40	5.5	7.5			28.9	17.2		419	417	414	406	390	367	338	289	222	159	414~222

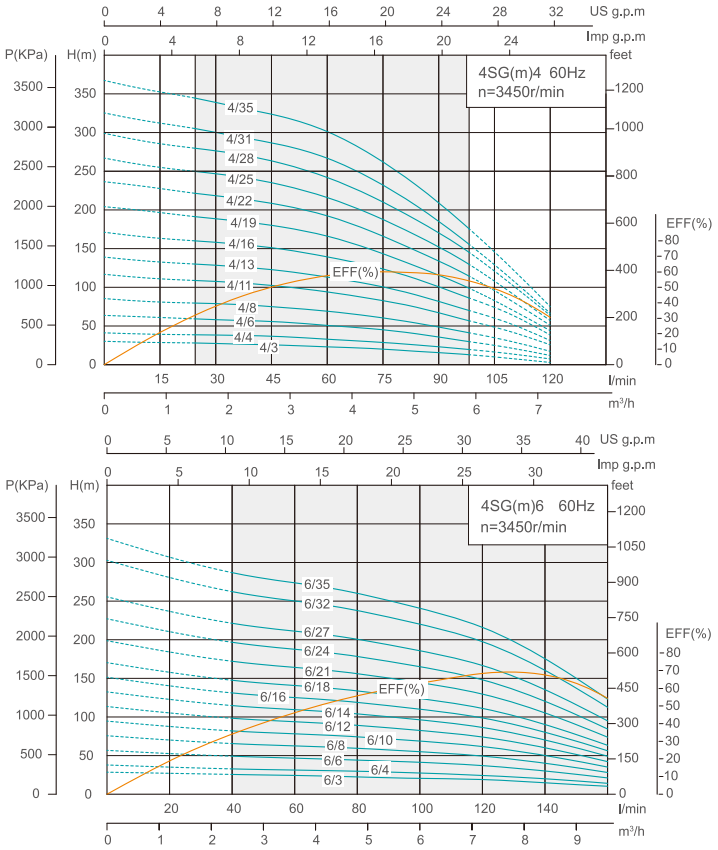

Model		Power		Rate Current (A)				Flow										Head Range (m)
Single-Phase	Three-Phase	kW	HP	Single		Three		m^3/h	0	0.9	1.8	2.7	3.6	4.5	5.4	6.3	7.2	
110V/220V	220V/380V			110V	220V	220V	380V	l/min	0	15	30	45	60	75	90	105	120	
4SGm4/3	-	0.37	0.5	8.4	4.2				30	28	27	26	23	20	16	10	3	28~13
4SGm4/4	-	0.55	0.75	11	5.5				41	39	38	37	33	29	23	16	7	39~20
4SGm4/6	4SG4/6	0.75	1	14.6	7.3	4.2	2.4		64	61	58	56	51	45	36	25	12	60~30
4SGm4/8	4SG4/8	1.1	1.5	18	9	5.4	3.1		85	81	79	75	69	60	49	35	17	80~42
4SGm4/11	4SG4/11	1.5	2	-	11.9	8.7	5		117	111	108	102	94	83	67	48	26	109~58
4SGm4/13	4SG4/13	2.2	3	-	15.6	12.8	7.4		139	133	128	123	113	100	82	60	31	131~71
4SGm4/16	4SG4/16	2.2	3	-	20.7	14.5	8.3		171	163	158	151	139	124	101	74	38	161~87
-	4SG4/19	3	4			15.9	9.2	H(m)	204	197	189	180	166	143	116	83	44	192~100
-	4SG4/22	3	4			17.6	10.1		236	228	218	209	192	166	134	96	51	223~116
-	4SG4/25	4	5.5			19.9	11.5		267	255	247	235	216	188	152	108	57	251~132
-	4SG4/28	4	5.5			23.5	13.2		299	286	276	263	242	210	170	121	64	281~147
-	4SG4/31	5.5	7.5			27.7	16		325	312	300	287	267	232	185	129	66	307~158
-	4SG4/35	5.5	7.5			28.9	17.2		367	352	339	324	301	262	209	146	75	346~178

Model		Power		Rate Current (A)				Flow										Head Range (m)
Single-Phase	Three-Phase	kW	HP	Single		Three		m^3/h	0	1.2	2.4	3.6	4.8	6	7.2	8.4	9.6	
110V/220V	220V/380V			110V	220V	220V	380V	l/min	0	20	40	60	80	100	120	140	160	
4SGm6/3	-	0.55	0.75	11	5.5				29	27	26	24	22	20	19	15	10	26~10
4SGm6/4	4SG6/4	0.75	1	14.6	7.3	4.2	2.4		38	35	33	31	30	27	24	20	14	33~14
4SGm6/6	4SG6/6	1.1	1.5	18	9	5.4	3.1		57	53	49	47	44	41	37	30	21	49~21
4SGm6/8	4SG6/8	1.5	2	-	11.9	8.7	5		76	70	66	63	59	55	49	40	28	66~28
4SGm6/10	4SG6/10	2.2	3	-	15.6	12.8	7.4		95	88	82	78	74	69	62	50	35	82~35
4SGm6/12	4SG6/12	2.2	3	-	20.7	14.5	8.3		114	105	98	94	89	83	74	60	42	98~42
-	4SG6/14	3	4			15.9	9.2	H(m)	132	123	115	109	104	96	86	70	49	115~49
-	4SG6/16	3	4			17.6	10.1		151	140	131	125	119	110	99	80	56	131~56
-	4SG6/18	4	5.5			19.9	11.5		170	158	148	141	134	124	111	90	63	148~63
-	4SG6/21	4	5.5			23.5	13.2		199	184	172	164	156	144	130	105	74	172~74
-	4SG6/24	5.5	7.5			27.7	16		227	210	197	188	178	165	148	120	84	197~84
-	4SG6/27	5.5	7.5			28.9	17.2		255	237	221	211	201	186	167	135	95	221~95
-	4SG6/32	7.5	10			31.2	18		303	281	262	250	238	220	197	160	113	262~113
-	4SG6/35	7.5	10			34.2	19.5		331	307	287	274	260	241	216	175	123	287~123

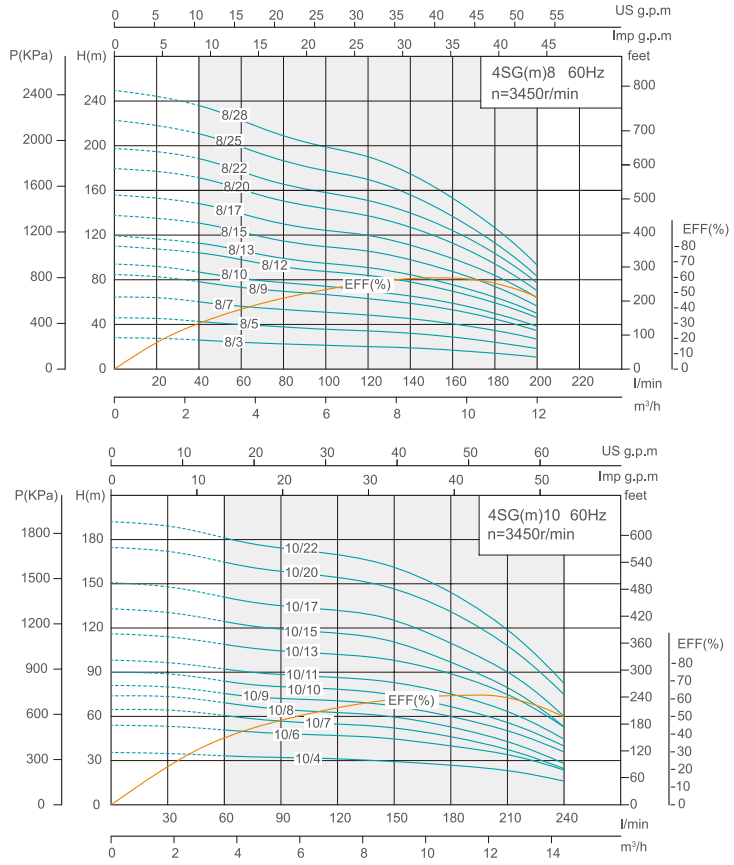

Model		Power		Rate Current (A)				Flow											Head
Single-Phase	Three-Phase	kW	HP	Single		Three		m^3/h	0	1.2	2.4	3.6	4.8	6	7.2	8.4	9.6	10.8	12	Range
110V/220V	220V/380V			110V	220V	220V	380V	l/min	0	20	40	60	80	100	120	140	160	180	200	(m)
4SGm8/3	4SG8/3	0.75	1	14.6	7.3	4.2	2.4		28	27	26	24	23	21	19	19	17	14	11	26~11
4SGm8/5	4SG8/5	1.1	1.5	18	9	5.4	3.1		46	45	43	40	38	36	32	32	29	24	18	43~18
4SGm8/7	4SG8/7	1.5	2	-	11.9	8.7	5		65	64	60	56	53	51	45	45	41	35	27	60~27
4SGm8/9	4SG8/9	2.2	3	-	15.6	12.8	7.4		85	83	78	73	70	67	59	59	53	45	34	78~34
4SGm8/10	4SG8/10	2.2	3	-	20.7	14.5	8.3		94	92	87	81	77	74	65	65	59	50	38	87~38
-	4SG8/12	3	4			15.9	9.2		110	108	104	98	91	87	78	78	70	59	46	104~46
-	4SG8/13	3	4			17.6	10.1		119	117	113	106	99	95	85	85	76	64	50	113~50
-	4SG8/15	4	5.5			19.9	11.5	H(m)	138	135	131	123	115	110	98	98	87	74	56	131~56
-	4SG8/17	4	5.5			23.5	13.2		156	153	148	140	130	124	113	113	99	84	64	148~64
-	4SG8/20	5.5	7.5			27.7	16		180	177	171	161	150	144	127	127	113	94	70	171~70
-	4SG8/22	5.5	7.5			28.9	17.2		198	195	188	177	166	158	140	140	124	104	77	188~77
-	4SG8/25	7.5	10			31.2	18		223	218	211	199	187	178	156	156	137	113	83	211~83
-	4SG8/28	7.5	10			34.2	19.5		250	244	236	223	209	199	175	175	153	126	93	236~93

Model		Power		Rate Current (A)				Flow									Head
Single-Phase	Three-Phase	kW	HP	Single		Three		m^3/h	0	1.8	3.6	5.4	7.2	9	10.8	12.6	14.4	Range
110V/220V	220V/380V			110V	220V	220V	380V	l/min	0	30	60	90	120	150	180	210	240	(m)
4SGm10/4	4SG10/4	1.1	1.5	18	9	5.4	3.1		36	35	33	32	31	29	27	23	16	33~16
4SGm10/6	4SG10/6	1.5	2	-	11.9	8.7	5		54	53	51	48	47	45	40	34	24	51~24
4SGm10/7	4SG10/7	2.2	3	-	15.6	12.8	7.4		65	64	61	57	55	52	46	38	25	61~25
4SGm10/8	4SG10/8	2.2	3	-	20.7	14.5	8.3		74	73	69	65	63	60	53	43	28	69~28
-	4SG10/9	3	4			15.9	9.2		81	80	76	72	71	67	60	50	36	76~36
-	4SG10/10	3	4			17.6	10.1		90	89	84	80	78	74	67	56	40	84~40
-	4SG10/11	4	5.5			19.9	11.5	H(m)	98	96	92	88	86	83	75	63	45	92~45
-	4SG10/13	4	5.5			23.5	13.2		116	114	109	105	102	98	89	75	53	109~53
-	4SG10/15	5.5	7.5			27.7	16		133	131	124	119	116	110	97	80	54	124~54
-	4SG10/17	5.5	7.5			28.9	17.2		151	148	141	135	132	125	110	90	60	141~60
-	4SG10/20	7.5	10			31.2	18		175	172	165	158	154	147	131	105	75	165~75
-	4SG10/22	7.5	10			34.2	19.5		192	189	181	174	170	161	144	119	82	181~82

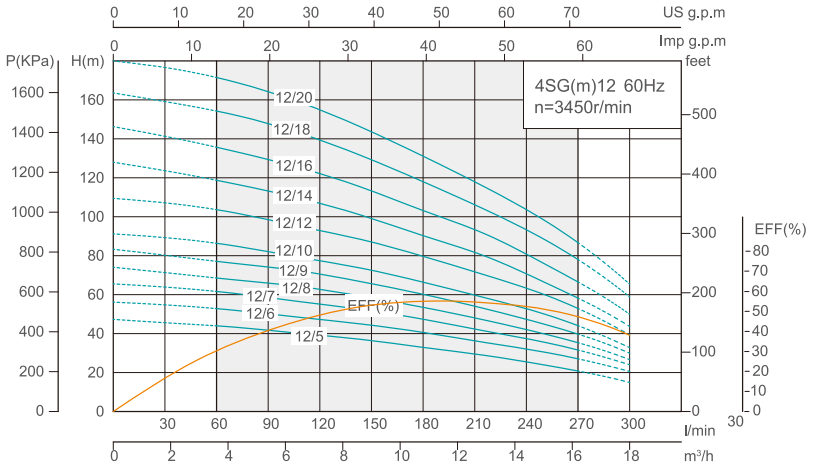

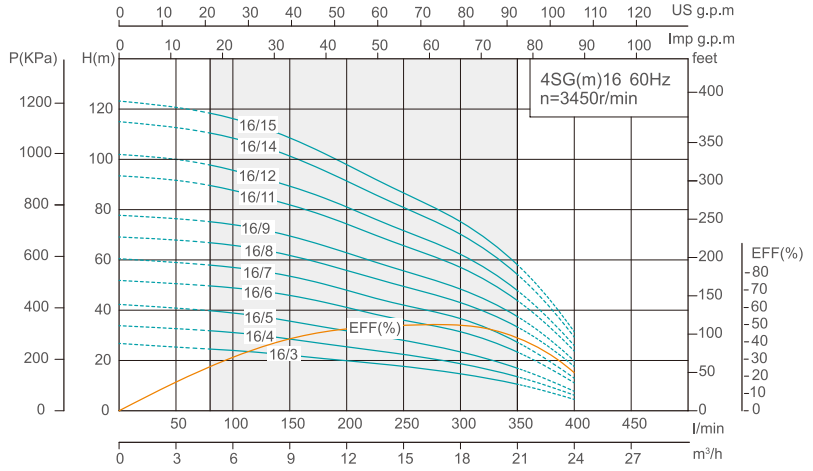

Model		Power		Rate Current (A)				Flow											Head Range (m)
Single-Phase	Three-Phase	kW	HP	Single		Three		m³/h	0	1.8	3.6	5.4	7.2	9	10.8	12.6	14.4	16.2	18	
110V/220V	220V/380V			110V	220V	220V	380V	l/min	0	30	60	90	120	150	180	210	240	270	300	
4SGm12/5	4SG12/5	1.5	2	-	11.9	8.7	5		47	46	44	42	39	36	33	30	25	21	15	44~21
4SGm12/6	4SG12/6	2.2	3	-	15.6	12.8	7.4		56	55	53	50	47	44	41	36	32	27	21	53~27
4SGm12/7	4SG12/7	2.2	3	-	20.7	14.5	8.3		66	64	62	59	55	52	47	42	37	32	24	62~32
-	4SG12/8	3	4			15.9	9.2		74	71	69	66	63	58	53	48	42	35	27	69~35
-	4SG12/9	3	4			17.6	10.1		83	80	77	74	71	66	60	54	47	40	30	77~40
-	4SG12/10	4	5.5			19.9	11.5		91	89	86	82	77	73	66	60	53	44	33	86~44
-	4SG12/12	4	5.5			23.5	13.2	H(m)	109	107	104	98	93	87	80	72	63	53	39	104~53
-	4SG12/14	5.5	7.5			27.7	16		128	124	119	113	107	99	90	82	71	58	44	119~58
-	4SG12/16	5.5	7.5			28.9	17.2		146	141	136	129	122	113	103	93	81	67	50	136~67
-	4SG12/18	7.5	10			31.2	18		164	159	154	148	142	129	118	106	93	78	59	154~78
-	4SG12/20	7.5	10			34.2	19.5		180	177	171	164	155	144	131	118	104	87	65	171~87

Model		Power		Rate Current (A)				Flow									Head Range (m)
Single-Phase	Three-Phase	kW	HP	Single		Three		m³/h	0	3	6	9	12	15	18	21	24	
110V/220V	220V/380V			110V	220V	220V	380V	l/min	0	50	100	150	200	250	300	350	400	
4SGm16/3	4SG16/3	1.5	2	-	11.9	8.7	5		27	25	24	22	20	18	15	11	5	25~11
4SGm16/4	4SG16/4	2.2	3	-	15.6	12.8	7.4		34	33	31	29	25	22	19	14	6	32~14
4SGm16/5	4SG16/5	2.2	3	-	20.7	14.5	8.3		43	41	40	36	31	28	24	18	8	40~18
-	4SG16/6	3	4			15.9	9.2		52	51	49	46	41	36	31	23	11	50~23
-	4SG16/7	3	4			17.6	10.1		61	60	57	54	48	42	36	27	13	58~27
-	4SG16/8	4	5.5			19.9	11.5	H(m)	69	68	66	62	56	49	43	33	18	67~33
-	4SG16/9	4	5.5			23.5	13.2		78	77	74	70	63	55	48	37	20	75~37
-	4SG16/11	5.5	7.5			27.7	16		93	92	88	82	74	66	57	44	24	90~44
-	4SG16/12	5.5	7.5			28.9	17.2		101	100	96	89	81	72	62	48	26	98~48
-	4SG16/14	7.5	10			31.2	18		115	113	108	101	91	81	70	54	29	110~54
-	4SG16/15	7.5	10			34.2	19.5		123	121	116	108	98	87	75	58	31	118~58

Components & Materials

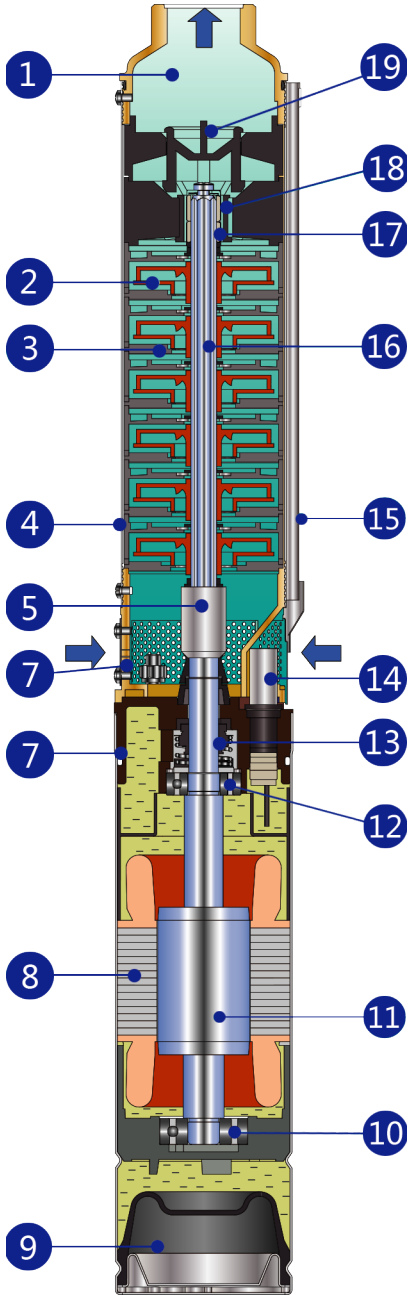

No.	Component	Material
1	Discharge Chamber	Brass, Casting
2	Impeller	POM
3	Guide Vanes	PC
4	Pump Sleeve	Stainless Steel
5	Shaft Coupling	Stainless Steel
6	Inlet Part	Brass, Casting
7	Oil Chamber	Brass, Casting, Stainless Steel
8	Stator	---
9	Pressure Regulating Membrane	NBR
10	Lower Sliding Bearing	0.37~0.75kW:6303 1.1~2.2kW:7303B 3~7.5kW:7304B DT
11	Rotor	AISI 304 + Steel 45#
12	Upper Sliding Bearing	6203
13	Mechanical Seal	118-16/26 S:K(PC)
14	Cable Joint	---
15	Cable Guard	Stainless Steel
16	Pump Shaft	Stainless Steel
17	Shaft Sleeve	Ceramic
18	Rubber Bearing	PEUR
19	Check Valve	PC